Available online at www.sciencedirect.com

SCIENCE DIRECT®

Ecological Modelling 174 (2004) 331–345

ECOLOGICAL MODELLING

www.elsevier.com/locate/ecolmodel

Ecosystem trophic structure and energy flux in the Northern Gulf of California, México☆

M.V. Morales-Zárate [a], F. Arreguín-Sánchez [b], J. López-Martínez [a], S.E. Lluch-Cota [a,*]

[a] *Centro de Investigaciones Biológicas del Noroeste (CIBNOR), P.O. Box 128, La Paz, BCS 23000, Mexico*
[b] *Centro Interdisciplinario de Ciencias Marinas (CICIMAR-IPN), P.O. Box 592, La Paz, BCS 23000, Mexico*

Received 23 October 2002; received in revised form 13 August 2003; accepted 2 September 2003

Abstract

Using the Ecopath with Ecosim software, a trophic structure model of the Northern Gulf of California was constructed to represent the main biomass flows in the system. It was based mostly on bibliographic data and provides a snapshot of how the ecosystem operates. The model consisted of 29 functional groups. The total system throughput was 6633 tonnes/km^2 per year, from which 51.7% are for internal consumption, 20.0% are for respiration, 16.0% becomes detritus, and 12.2% are removed through commercial fishing. Main results show that most groups were impacted more by predation and competition than by fishing pressure, and that there are some characteristics that indicate that use of the ecosystem is balanced.
© 2003 Elsevier B.V. All rights reserved.

Keywords: Ecopath; Trophic structure; Ecological model; Gulf of California; Fishery; Biosphere reserve

1. Introduction

The Northern Gulf of California (Fig. 1) has a surface area of almost 7200 km^2 (Nelson et al., 1980) reaching from the Colorado River Delta southward to the large islands of Tiburón and Angel de la Guarda, and have an average depth of 200 m. Nutrient enrichment is driven mainly by tidal mixing (Zeitschel, 1969), resulting in high productivity throughout the year (Lluch-Cota and Arias-Arechiga, 2000).

It is an important fishery, where 77% of the inhabitants are involved in fishing activities (INEGI, 2000), mainly harvesting blue and brown shrimp for packing and shipment from three ports at the most northern end of the Gulf (Puerto Peñasco and Santa Clara in Sonora state and San Felipe in Baja California state; Fig. 1). The northernmost area has great ecological interest because it is considered a natural refuge and nursery area for hundreds of species, including some endemic and some endangered, especially since 1993 it was designated a biosphere reserve from 31°00′ to 32°10′N and 113°30′ to 115°15′W (Gómez-Pompa and Dirzo, 1995; Fig. 1). Since 1997, some environmental organizations have proposed that the southern boundary of the reserve be expanded to the large islands (Tiburón and Angel de la Guarda), restricting the numbers of boats, and banning trawlers, arguing that these protective measures will improve the health of the upper Gulf ecosystem and increase economic opportunities for residents in the longer term (World WildLife México, 2003). Nevertheless, if these protective measures are approved, they probably will cause a

☆ Supplementary data associated with this article can be found, in the online version, at doi:10.1016/j.ecolmodel.2003.09.028.

* Corresponding author. Tel.: +52-612-1253633x3432; fax: +52-612-1238522.
E-mail address: slluch@cibnor.mx (S.E. Lluch-Cota).

0304-3800/$ – see front matter © 2003 Elsevier B.V. All rights reserved.
doi:10.1016/j.ecolmodel.2003.09.028

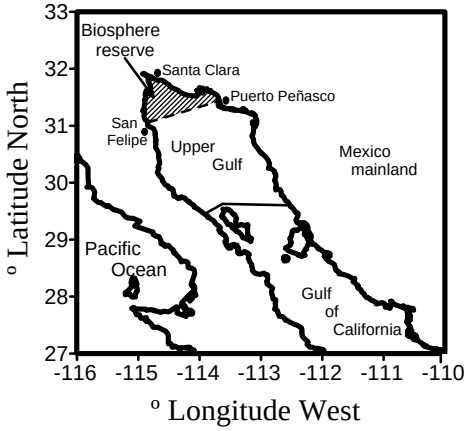

Fig. 1. Study area showing the Northern Gulf Biosphere Reserve and main fishing ports.

significant socio-economic impact on residents of the Northern Gulf of California.

Despite controversy over the conflict between exploitation and conservation in the region, no quantitative data exist on the impact of fisheries, especially shrimp extraction, on the ecosystem and on other species. In this study, we present a trophic structure model focused on biomass flows among components and species of ecological and commercial interest, with the purpose of finding parameters that allow estimates of the impact of the fishing activity in the entire ecosystem.

2. Methods and materials

Trophic interactions and energy flux were evaluated using the Ecopath with Ecosim model (EwE; Polovina and Ow, 1983; Polovina, 1984; Christensen and Pauly, 1992). Its basic premise is that, in a given time period, the system will be in balance, that is, production is equal to consumption and is defined by the following equation:

$$P_i - B_i M2_i - P_i(1 - \mathrm{EE}_i) - \mathrm{EX}_i = 0 \quad (1)$$

where for an i group, P_i is production, B_i is biomass in tonnes wet weight, $M2_i$ is mortality by predation, EE is ecotrophic efficiency, and EX_i is export. Ecotrophic efficiency is the proportion of organisms that die by predation and export, including fishing extraction. The first term represents production, the second represents losses by predation, the third represents losses that are not assigned to predation or export, and the last term represents losses by export. The equation is equal to 0 because it is at balance.

Because material transfers between groups is through trophic relationships, Eq. (1) is re-expressed:

$$B_i \left(\frac{P}{B}\right)_i \mathrm{EE}_i - \sum_{j=1}^{n} B_j \left(\frac{Q}{B}\right)_j \mathrm{DC}_{ji} - B_i \left(\frac{P}{B}\right)_i (1 - \mathrm{EE}) - \mathrm{EX}_i = 0 \quad (2)$$

where subscript j represent predators, B_j is its biomass in tonnes wet weight, P/B is production to biomass ratio, which is equal to the instantaneous rate of total mortality (Z) at equilibrium (Allen, 1971). We used an annual base. EE_i and EX_i are the same as in Eq. (1), Q/B_j is consumption to biomass ratio of group j. Annual base and DC_{ji} is the fraction of prey i in the diet of predator j.

Each group was represented by a similar equation, and a system of linear equations was established in which at least three of the four parameters (B, P/B, Q/B, and EE) of each group was known and only one was estimated by the model, if needed. In summary, Eq. (2) describes the biomass flow balance between inputs and outputs for each group.

Most species were included in functional groups sharing similar trophic roles. Only those of particular interest were kept as individual groups: commercially important species such as blue, brown, and rocky shrimp: *Litopenaeus stylirostris*, *Farfantepeneaeus californiensis*, and *Sicyonia penicillata*, respectively, and ecologically interesting species such as totoaba, vaquita, and sea lion: *Totoaba macdonaldi*, *Phocoena sinus*, and *Zalophus californianus*, respectively. Our classification resulted in 29 functional groups (Table 1).

Biomass was estimated from published reports (Table 1), and was calculated with the swept area method (Pauly, 1984a,b) that is based on the densities of fish (i.e., the weight of the fish caught per unit area covered by an experimental gear), from which the potential yield can be obtained. When possible, information for different groups came from the same source; for example, we used Pérez-Mellado (1980) for sharks

Table 1
Sources of input parameters for Northern Gulf of California trophic model

	Group	Biomass	*P*/*B*	*Q*/*B*	EE	Diets
1	Totoaba	4	13	13	–	15
2	Vaquita	2	–	28	–	28
3	Sharks	1	10	27	–	31
4	Sea lion	3	11	28	–	32
5	False whales	3	12	28	–	28
6	Hakes	5	18	18	–	35
7	Whales	3	12	28	–	28
8	Croakers	1	15	15	–	34
9	Guitarfish	1	17	17	–	34
10	Groupers	1	16	16	–	34
11	Squillas	6	23	23	–	41
12	Crabs	7	25	30	–	30
13	Rays	1	22	22	–	39
14	Rocky shrimp	8	8	30	–	42
15	Flat fishes	1	19	19	–	36
16	Other fishes	1	14	14	–	Supposed
17	Linter fish	–	21	21	Supposed	38
18	Brown shrimp	7	24	30	–	42
19	Blue shrimp	7	24	30	–	42
20	Cephalopods	–	23	29	Supposed	40
21	Polychaetes	–	26	30	Supposed	30
22	Grunts	1	14	14	–	34
23	Mojarres	1	14	14	–	33
24	Small pelagics	1	20	20	–	37
25	Benthic macro-invertebrates	7	–	Supposed	–	30
26	Zooplankton	–	Supposed	–	Supposed	Supposed
27	Phytoplankton	–	Supposed	–	Supposed	–
28	Algae	9	Supposed	–	–	–
29	Detritus	–	–	–	–	–

Sources of information corresponding to numbers: 1: Pérez-Mellado (1980); 2: Silber (1990); 3: Randall et al. (1980); 4: Arvizu and Chávez (1972); 5: Nelson et al. (1980); 6: FAO (1995); 7: Felix-Pico (1973); 8: López-Martínez et al. (1997); 9: Littler and Littler (1981); 10: Branstetter (1987); 11: Lluch-Belda (1970); 12: Cetacea (2001); 13: Pauly (1978); 14: Eschmeyer et al. (1983); 15: Chao (1995); 16: Arreguín-Sánchez et al. (1996); 17: McEachran (1995a); 18: Cohen et al. (1990); 19: Hensley (1995); 20: Whitehead (1985); 21: Moser and Ahlstrom (1996); 22: McEachran (1995b); 23: Arreguín-Sánchez et al. (2003b); 24: López-Martínez (2000); 25: Hernández-Moreno (2000); 26: Theronx and Wigley (1998); 27: Compagno (1984); 28: IMMA (2001); 29: CephBase (2001); 30: Zetina-Rejón (1999); 31: Galván-Magaña and Nienhuis (1989); 32: García-Rodríguez (1999); 33: Fitch and Lavenberg (1975); 34: Cruz-Escalona (1998); 35: Balart and Castro-Aguirre (1995); 36: Dou (1992); 37: Molina and Manrique (1997); 38: Collard (1970); 39: Bocanegra-Castillo (1998); 40: Boletzky and Hanlon (1983); 41: Crustacean (2001); 42 Dall et al. (1990).

(Carcharhinides, Ginglymostomatides, Heterodontides, and Lamnides), rays (Dasyatides, Gymnurides, and Myliobatides), and fish, except hake (*Merluccius* sp.), linter fish (Myctophides), and totoaba.

For commercially unimportant groups, P/B corresponded to the instantaneous rate of natural mortality (M). M was estimated from data in FishBase (Froese and Pauly, 2001) for fish species, using the empirical equation of Pauly (1980) and $P/B = 1.5$ as a first estimate because information on by-catch mortality is lacking. We used mortality values reported in the literature for the remaining functional groups.

The Q/B relation represents the amount of food ingested by a group with respect to its own biomass in a given period. Values for fish groups were computed with the empirical equation of Jarre et al. (1990), which considers environmental temperature, fish weight and size, and caudal fin morphology. The algorithm is available in FishBase (Froese and Pauly, 2001). For invertebrates, sharks, and rays, Q/B was

taken from the literature (Table 1). For marine mammals, Q/B was estimated by dividing daily ingestion weight during a year by body weight of an average individual (García-Rodríguez, 1999; IMMA, 2001). In most cases, the software computed ecotrophic efficiency, since Eq. (2) assumes balance between terms. However, we assumed a value of EE based on literature for the same or a similar species when no input data were available (Table 1). A predator–prey matrix was developed from reports of stomach contents for the different functional groups, using reports for similar species or groups when no data were available.

Fishing fleets and catches (Y_i) of important species were included in the model, impacting on the following groups: shrimp (three species), croakers (Sciaenides), guitar fish (Rhinobatides), groupers (*Epinephelus* sp.), rays (Dasyatides, Mylobatides, and Rajides), and flat fish (Pleuronectides and Paralichthydes), grunts (Haemulides), mojarres (Gerreides, Sparides), and crabs (*Callinectes* sp.). Data were obtained from San Felipe and Puerto Peñasco fisheries regional offices.

We used EE < 1 as the primary criterion to balance the model. The diet matrix was adjusted by modifying the initial values and producing small changes. We selected this approach because diet is the source of greatest uncertainty and we avoided large modification of the feeding patterns of functional groups. For example, the vaquita mainly feeds on fish, so we changed its initial consumption of hake from 0.92 to 0.086 without modifying its diet patterns.

Consistency of the model was mainly verified by comparing trends in the respiration to biomass ratio (R/B), which must be higher for active species than for sedentary groups.

Once the model was balanced and consistent, we minimized residuals with the Ecoranger routine (Pauly and Christensen, 1996), which allows entry of a range and mean/mode values for all basic parameters, i.e., biomass, consumption rates, production rates, ecotrophic efficiencies, and all elements of the composition of diets. Random input variables are then drawn with specific frequency distributions selected by the user. In this case, we used normal distribution for all parameters. The resulting model was then evaluated with defined criteria and physiological and mass balance constraints. The process was repeated in a Monte-Carlo fashion included in the routine of the model runs that pass the selection criteria, the best-fitting one was chosen with a least square criterion.

EwE was used also to evaluate various flow indices, such as total system ascendancy (measure of ecosystem flow; Christensen, 1994, 1995; Pérez-España and Arreguín-Sánchez, 2001), total system throughput (sum of flows and measure of ecosystem size; Ulanowicz and Norden, 1990), and path length (average number of groups that an inflow or outflow passes through). Additionally, mixed trophic impacts of each group and other physiological information about species groups and the ecosystem, such as transfer efficiencies, omnivore index, respiration, and assimilation, were computed (Christensen and Pauly, 1993; Vega-Cendejas and Arreguín-Sánchez, 2001).

3. Results

Table 2 shows values of the balanced model, including those estimated by the software. The first column shows the trophic level (TL), a dimensionless index (Christensen et al., 2000). In Ecopath, TL can be an integer or a fraction, as suggested by Odum and Heald (1975). We obtain four discrete TLs, and except for grunts, all fish groups obtained a TL very close to the reported in the FishBase database (Froese and Pauly, 2003).

Other parameters shown in Table 2 are biomass in habitat area, which is the biomass in the area where the group most probably occurs. For groups that are homogenously distributed, the biomass in area is the same of the total biomass value.

For the detritus group, a relatively low EE was obtained, meaning that biomass accumulation is greater than consumption and the difference is assumed to either end up as accumulated detritus, buried as sediment, or exported from the system (Christensen et al., 2000). In general terms, high EE resulted for primary producers (0.90) and lower values for top predators, except totoaba (0.85), probably resulting from underestimating biomass.

Table 3 shows ecological attributes estimated with the software, and used to test model consistency. Nutritional conversion efficiency (gi) ranged from 0.009 to 0.488 (tonnes per year) with an inverse relationship to trophic level. The respiration to biomass (R/B) ratio

Table 2
Input and estimated values (in bold) for the Northern Gulf of California model

	Group	Trophic level	Habitat area (fraction)	Biomass habitatonnes/ fraction (tonnes/km^2)	Biomass (tonnes/km^2)	*P*/*B* (tonnes per year)	*Q*/*B* (tonnes per year)	EE
1	Totoaba	**4.20**	0.15	**0.010**	0.066	0.400	5.00	**0.847**
2	Vaquita	**4.10**	0.30	**0.002**	0.005	**0.600**	30.00	**0.563**
3	Sharks	**4.10**	0.60	**0.474**	0.790	0.280	3.00	**0.764**
4	Sea lion	**4.00**	0.10	**0.033**	0.330	0.544	23.73	**0.362**
5	False whales	**3.90**	0.60	**0.138**	0.230	0.236	26.45	**0.199**
6	Hakes	**3.90**	0.30	**0.147**	0.490	0.450	1.85	**0.894**
7	Whales	**3.60**	0.50	**0.190**	0.380	0.200	2.92	**0.171**
8	Croakers	**3.50**	0.30	**0.346**	1.152	2.950	12.10	**0.822**
9	Guitar fish	**3.50**	0.30	**0.331**	1.102	2.300	10.20	**0.916**
10	Groupers	**3.50**	0.25	**0.294**	1.176	0.790	3.60	**0.972**
11	Squillas	**3.30**	0.55	**0.264**	0.480	6.300	12.90	**0.945**
12	Crabs	**3.30**	0.55	**0.029**	0.053	2.650	6.28	**0.982**
13	Rays	**3.20**	0.30	**0.563**	1.878	3.450	18.40	**0.944**
14	Rocky shrimp	**3.10**	0.45	**0.090**	0.200	3.000	8.50	**0.923**
15	Flat fishes	**3.10**	0.45	**1.504**	3.343	4.950	10.20	**0.499**
16	Other fishes	**3.00**	1.00	**5.540**	5.540	1.950	5.60	**0.864**
17	Linter fish	**3.00**	0.60	**1.253**	2.089	2.500	7.94	0.750
18	Brown shrimp	**3.00**	0.40	**0.026**	0.064	2.650	8.50	**0.907**
19	Blue shrimp	**3.00**	0.50	**0.450**	0.900	4.030	10.20	**0.864**
20	Cephalopods	**2.90**	0.40	**3.186**	**7.966**	3.450	11.68	0.750
21	Polychaetes	**2.90**	1.00	**22.933**	**22.933**	8.000	27.00	0.800
22	Grunts	**2.80**	0.40	**3.628**	9.070	2.850	14.40	**0.946**
23	Mojarres	**2.80**	0.40	**3.304**	8.259	1.650	6.20	**0.908**
24	Small pelagics	**2.70**	0.30	**0.073**	0.243	3.980	10.30	**0.981**
25	Benthic macro-invertebrates	**2.50**	1.00	**2.886**	2.886	**38.000**	84.00	**0.975**
26	Zooplankton	**2.40**	1.00	**39.455**	**39.455**	27.00	60.00	0.900
27	Phytoplankton	**1.00**	1.00	**33.949**	**33.949**	60.00	–	0.900
28	Algae	**1.00**	0.70	**1.610**	2.300	60.00	–	**0.900**
29	Detritus	**1.00**	1.00	–	–	–	–	**0.252**

was consistent with other authors (Jarre-Teichmann, 1992; Arreguín-Sánchez et al., 1993a,b; Olivieri et al., 1993; Pauly and Christensen, 1996; Vega-Cendejas, 1998; Zetina-Rejón, 1999).

Respiration to assimilation ratio ranged from 0.390 to 0.989 tonnes/km^2 per year, with the highest value corresponding to high trophic level. High values of omnivory corresponded to crabs, mojarres, and grunts, suggesting that predators have a relatively narrow trophic range compared with lower levels. This was not consistent with the false whales group that had the lowest omnivory, but it was probably due to its ichthyophagous nature, and to the small differentiation between the fish groups that were considered. Table 4 shows the adjusted predator–prey matrix. Table 5 shows the basic attributes of the system: The total system throughput was 6633 tonnes/km^2 per year, where internal consumption accounts for 51.7% of total flows, respiration for 20%, detritus for 16.1%, and export out of the system (commercial fishing) for 12.2%.

Total primary production to respiration ratio (TPP/*R*) was 1.61, indicating that TPP is approximately 60% greater than respiration. The total primary production to biomass ratio was 17.38 tonnes/km^2 per year, suggesting a nearly mature state because this rate is lower when the system approaches maturity (Odum, 1969; Christensen, 1995). The connectance index is the proportion of theoretically possible trophic connections, and had a value of 0.319.

Table 6 shows an ascendency (*A*) value of 6187.8 flow bits, with 10.9% corresponding to internal flows.

Table 3
Ecological attributes for the upper Gulf of California model

	Group	*gi* (tonnes per year)	*R*/*B* (tonnes/km^2 per year)	Assimilation (tonnes/km^2 per year)	Respiration/ assimilation (tonnes/km^2 per year)	Production (tonnes/km^2 per year)	Flow to detritus (tonnes/km^2 per year)	Omnivory index
1	Totoaba	0.080	0.55	0.040	0.900	0.004	0.011	0.117
2	Vaquita	0.020	7.00	0.036	0.975	0.001	0.009	0.150
3	Sharks	0.093	1.27	1.138	0.883	0.133	0.316	0.078
4	Sea lion	0.023	1.84	0.626	0.971	0.018	0.168	0.086
5	False whales	0.009	12.55	2.920	0.989	0.032	0.756	0.031
6	Hakes	0.243	0.31	0.218	0.696	0.066	0.061	0.046
7	Whales	0.068	1.07	0.444	0.914	0.038	0.142	0.044
8	Croakers	0.244	2.02	3.345	0.695	1.019	1.017	0.495
9	Guitarfish	0.225	1.76	2.698	0.718	0.759	0.738	0.650
10	Groupers	0.219	0.52	0.847	0.726	0.232	0.218	0.738
11	Squillas	0.488	2.21	2.724	0.390	1.663	0.773	0.622
12	Crabs	0.422	1.30	0.146	0.473	0.077	0.038	0.799
13	Rays	0.188	3.38	8.293	0.766	1.943	2.182	0.587
14	Rocky shrimp	0.353	1.71	0.612	0.559	0.270	0.174	0.552
15	Flat fishes	0.485	1.44	12.276	0.393	7.446	6.798	0.691
16	Other fishes	0.348	2.53	24.819	0.565	10.806	7.673	0.678
17	Linter fish	0.315	2.31	7.958	0.606	3.131	2.773	0.705
18	Brown shrimp	0.312	1.66	0.174	0.610	0.068	0.050	0.672
19	Blue shrimp	0.395	2.06	3.670	0.506	1.812	1.164	0.606
20	Cephalopods	0.295	2.36	29.773	0.631	10.986	10.191	0.574
21	Polychaetes	0.296	13.60	495.361	0.630	183.394	160.534	0.626
22	Grunts	0.198	3.47	41.795	0.753	10.349	11.011	0.766
23	Mojarres	0.266	1.32	16.386	0.667	5.446	4.600	0.776
24	Small pelagics	0.386	1.28	0.601	0.517	0.290	0.156	0.510
25	Benthic macro-invertebrates	0.452	29.20	193.939	0.435	109.637	51.267	0.534
26	Zooplankton	0.450	21.00	1893.857	0.438	1065.531	579.994	0.429
27	Phytoplankton	–	–	–	–	1868.880	203.691	–
28	Algae	–	–	–	–	86.880	9.662	–
29	Detritus	–	–	–	–	–	–	–

Ascendency is a measure of the information content in the ecosystem derived from information theory (Ulanowicz and Norden, 1990), is symmetrical, and will have the same value whether calculated from input or output. The upper limit for the size of the ascendency corresponds to the development capacity (DC). In this case, DC was of 25925.3 flow bits. With those parameters, we interpreted ascendency in the current state of the ecosystem to be 24% of the development capacity (*A*/DC). The difference between the DC and the *A* is the system overhead, that is, the maximum energy reserve of the ecosystem for potential use against disturbances (Ulanowicz, 1986). We obtained a high overhead when compared with other ecosystems (i.e., 16435.8 for the Huizache-Caimanero coastal lagoon, Zetina-Rejón, 1999; 17832.4 for the Veracruz continental shelf, Cruz-Escalona, personal communication), and this was probably a result of the large amount of detritus and the relatively high flows of biomass from detritus of living groups, since detritus was considered as a group that allows modulation of trophic impacts (Pérez-España and Arreguín-Sánchez, 2001).

Fig. 2 shows the biomass flows (only flows greater than 10% of the total are shown). The size of the box is proportional to biomass for each group. Boxes are distributed on the *Y*-axis according to trophic level.

Trophic interactions, expressed in proportions from 0 to 1, were analyzed by trophic niche overlaps (Fig. 3). Values close to unity indicate large trophic

Table 4
Adjusted diet matrix for upper Gulf of California model

	Prey	Predator												
		1	2	3	4	5	6	7	8	9	10	11	12	13
1	Totoaba	0.010	0.015		0.002									
2	Vaquita			0		0								
3	Shark			0.001										
4	Sea lion			0.002		0.001								
5	False whales			0.002		0.001								
6	Hakes	0.085	0.086	0.017		0.007								
7	Whales			0.002		0.001								
8	Croakers	0.125	0.153	0.109	0.165	0.019			0.013		0.006			
9	Guitarfish	0.057		0.07		0.009			0.001		0.036	0.014		
10	Groupers	0.002	0.04	0.03	0.059	0.003								
11	Squillas								0.003	0.067	0.116	0.07	0.179	0.022
12	Crabs									0.012	0.022		0.008	0.001
13	Rays								0.04	0.106	0.061	0.024		0.003
14	Rocky shrimp	0.076					0.014		0.001		0.033		0.006	0.001
15	Flat fishes	0.197			0.029	0.024			0.004	0.094	0.002	0.054		0.001
16	Other fishes	0.124	0.158	0.367	0.164	0.156	0.289		0.24	0.112	0.116			0.057
17	Linter fish	0.001	0.139	0.143	0.15	0.088	0.328	0.114	0.025					
18	Brown shrimp	0.01					0.001		0.005		0.012		0.061	0
19	Blue shrimp	0.018					0.01		0.032	0.012	0.026	0.033	0.066	0.01
20	Cephalopods	0.095	0.119		0.068	0.285			0.044					
21	Polychaetes						0.069	0.069	0.066	0.174	0.061	0.12	0.09	0.219
22	Grunts	0.16	0.018	0.146	0.128	0.26			0.033		0.006	0.005		
23	Mojarres	0.041	0.091	0.11	0.169	0.143			0.04	0.004	0.009			
24	Small pelagics		0.181		0.049	0.003	0.158	0.154						
25	Benthic macro-invertebrates				0.018		0.032	0.226	0.298	0.217	0.269	0.425	0.217	0.421
26	Zooplankton						0.099	0.438				0.012	0.071	
27	Phytoplankton											0.039	0.208	
28	Algae										0.225	0.006	0.093	0.032
29	Detritus								0.155	0.203		0.198		0.232

		14	15	16	17	18	19	20	21	22	23	24	25	26
1	Totoaba			0										
2	Vaquita													
3	Shark													
4	Sea lion													
5	False whales													
6	Hakes			0	0									
7	Whales													
8	Croakers			0										
9	Guitarfish			0						0.001				
10	Groupers													
11	Squillas			0.007							0.018			
12	Crabs			0										
13	Rays		0.012							0.005				
14	Rocky shrimp		0.001	0						0.001	0.001			
15	Flat fishes		0.012	0.023						0.002				
16	Other fishes		0.059	0.012	0.037					0.029				
17	Linter fish			0.001	0.117									
18	Brown shrimp		0	0										
19	Blue shrimp		0.005	0.012						0.006	0.001			

Table 4 (*Continued*)

	Prey	Predator												
		1	2	3	4	5	6	7	8	9	10	11	12	13
20	Cephalopods			0.049	0.117			0.112		0.002				
21	Polychaetes	0.241	0.154	0.097		0.298	0.156		0.16	0.212	0.276		0.087	
22	Grunts			0.087						0.036				
23	Mojarres		0.041	0.016										
24	Small pelagics			0										
25	Benthic macro-invertebrates	0.347	0.342	0.095		0.214	0.333		0.101	0.175	0.139		0.053	
26	Zooplankton	0.121		0.228	0.352	0.102	0.119	0.49	0.283	0.009		0.501	0.177	0.300
27	Phytoplankton	0.051		0.122	0.377	0.084	0.119	0.361	0.155			0.461	0.24	0.700
28	Algae	0.023	0.01	0.172		0.017	0.034		0.047	0.324	0.188	0.038	0.127	
29	Detritus	0.216	0.364	0.078		0.286	0.24	0.037	0.255	0.199	0.376		0.317	

Quantities are percentages of each prey in the diet of each predator.

niche overlap. High overlap corresponds to detritus consumers and some planktophagous groups, such as small pelagic and linter fish. Direct and indirect impacts between groups in the ecosystem were computed and are shown in Fig. 4 for selected groups, i.e., those targeted for conservation, such as totoaba, vaquita, and sea lion, and important fisheries resources, such as shrimp. In general terms, mammals impacted negatively on other mammals, probably because they share similar prey. Species targeted for conservation were slightly impacted negatively by fishing fleets, with the exception of sea lions and shrimp fleets. Although totoaba were impacted most, vaquita were affected negatively, probably because of its very small population or lack of information. Detritus in the system affected almost all groups positively, as happens in the coastal lagoons where discrete trophic levels, mostly in the 3.0–4.0 range, and were attributed to dependence of the food web on detritus and to the abundance of juvenile fish using lagoons as nursery areas (Yañez-Arancibia et al., 1988; Manikchand-Haileman et al., 1998a). In contrast, some authors reported high fractional trophic levels for continental shelf ecosystems (Arreguín-Sánchez et al., 1993b; Manikchand-Haileman et al., 1998b), where adult fish were expected to be more abundant. In this work, we found neither was dominant. However, we observed a distribution proportional to the number of groups in the 2.5–3.6 range, including almost all invertebrates and many fish groups, most of them primary or secondary consumers. Accordingly, we hypothesized that, since there are many detritovores in lagoons, the Northern Gulf of California is used as a nursery and a maturing area where many groups reach adult age.

Table 5
Ecosystem properties for upper Gulf of California as computed by Ecopath

Parameter	Value	Units
Sum of all consumption	3430.9	tonnes/km^2 per year
Sum of all exports	810.0	tonnes/km^2 per year
Sum of all respiratory flows	1329.7	tonnes/km^2 per year
Sum of all flows into detritus	1062.3	tonnes/km^2 per year
Total system throughput	6633.0	tonnes/km^2 per year
Sum of all production	3547.0	tonnes/km^2 per year
Calculated total net primary production	2133.5	tonnes/km^2 per year
Total primary production/total respiration	1.61	
Net system production	803.9	tonnes/km^2 per year
Total primary production/total biomass	17.4	
Total biomass/total throughput	0.02	
Total biomass (excluding detritus)	122.7	tonnes/km^2
Total catches	15.4	tonnes/km^2 per year
Mean trophic level of the catch	2.93	
Connectance index	0.32	
System omnivory index	0.55	

4. Discussion

Comparing this model with five models of marine ecosystems used around Mexico, we observed that ratios of total consumption and total respiration to total system throughput suggest higher energy use in

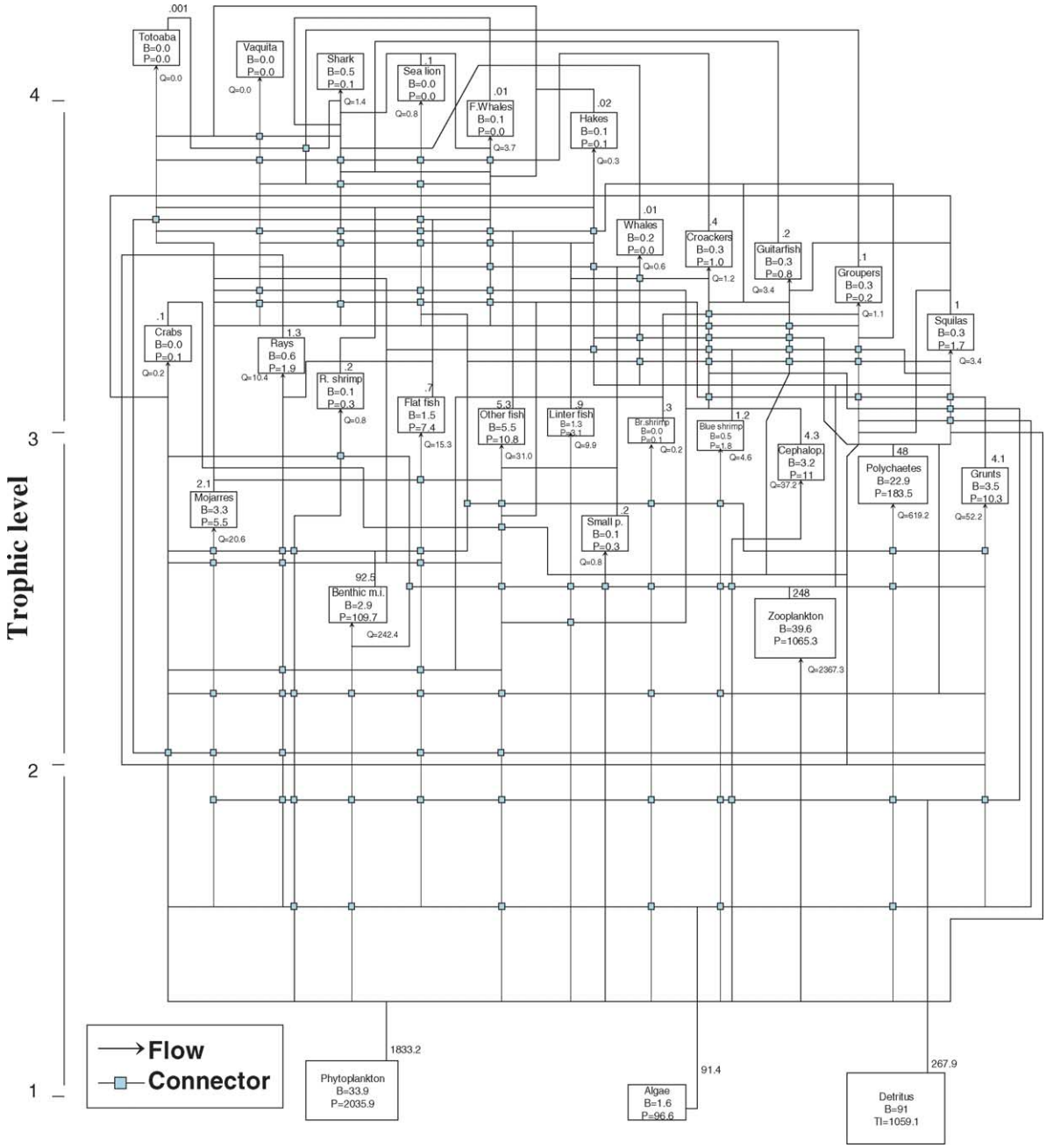

Fig. 2. Flowchart of biomass showing trophic interactions in the Northern Gulf of California system. All flows are expressed in tonnes/km^2 per year. Boxes are placed on the *Y*-axis according to trophic level; the size of each is proportional to biomass for each group. *B*: biomass, *P*: production, and *Q*: consumption.

Table 6
Totals of flux indices for upper Gulf of California ecosystem model

Source	Ascendency		Overhead		Capacity	
	Flow bits	Percent	Flow bits	Percent	Flow bits	Percent
Import	0	0	0	0	0	0
Internal flow	2822.9	10.9	15138.8	58.4	17961.6	69.3
Export	2072.1	8	540.8	2.1	2613.3	10.1
Respiration	1292.8	5	4057.6	15.7	5350.4	20.6
Total	6187.8	23.9	19737.1	76.1	25925.3	100

the Northern Gulf of California ecosystem; in fact the two indices are about 68 and 27%, respectively, higher than the average of the ecosystems that were compared. The connectance index and system omnivory are 16 and 95% higher than the averages, suggesting that the Northern Gulf of California is highly dynamic, more complex, and probably a more mature ecosystem among those compared (Table 7).

One of the main challenges in ecosystem theory is to define ecosystem reference point (ERP), which can be

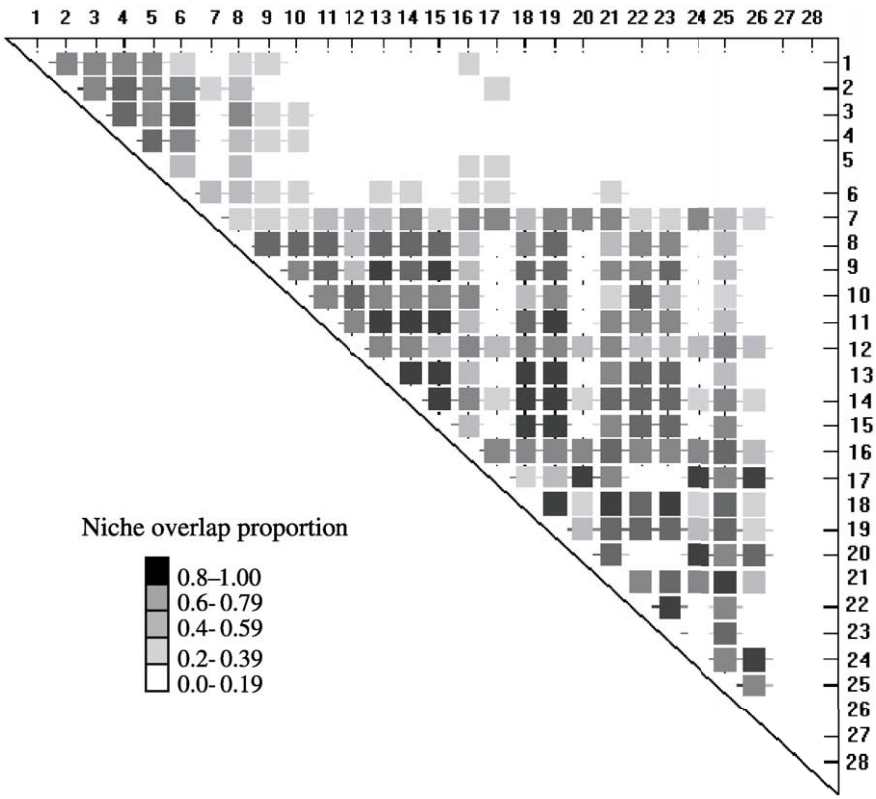

Fig. 3. Trophic niche overlaps between functional groups. Axis numbers correspond to functional groups in the following way: 1: totoaba, 2: vaquita, 3: sharks, 4: sea lion, 5: false whales, 6: hakes, 7: whales, 8: croakers, 9: guitar fish, 10: groupers, 11: squillas, 12: crabs, 13: rays, 14: rocky shrimp, 15: flat fishes, 16: other fish, 17: linter fish, 18: brown shrimp, 19: blue shrimp, 20: cephalopods, 21: polychaetes, 22: grunts, 23: mojarres, 24: small pelagics, 25: benthic macro-invertebrates, 26: zooplankton.

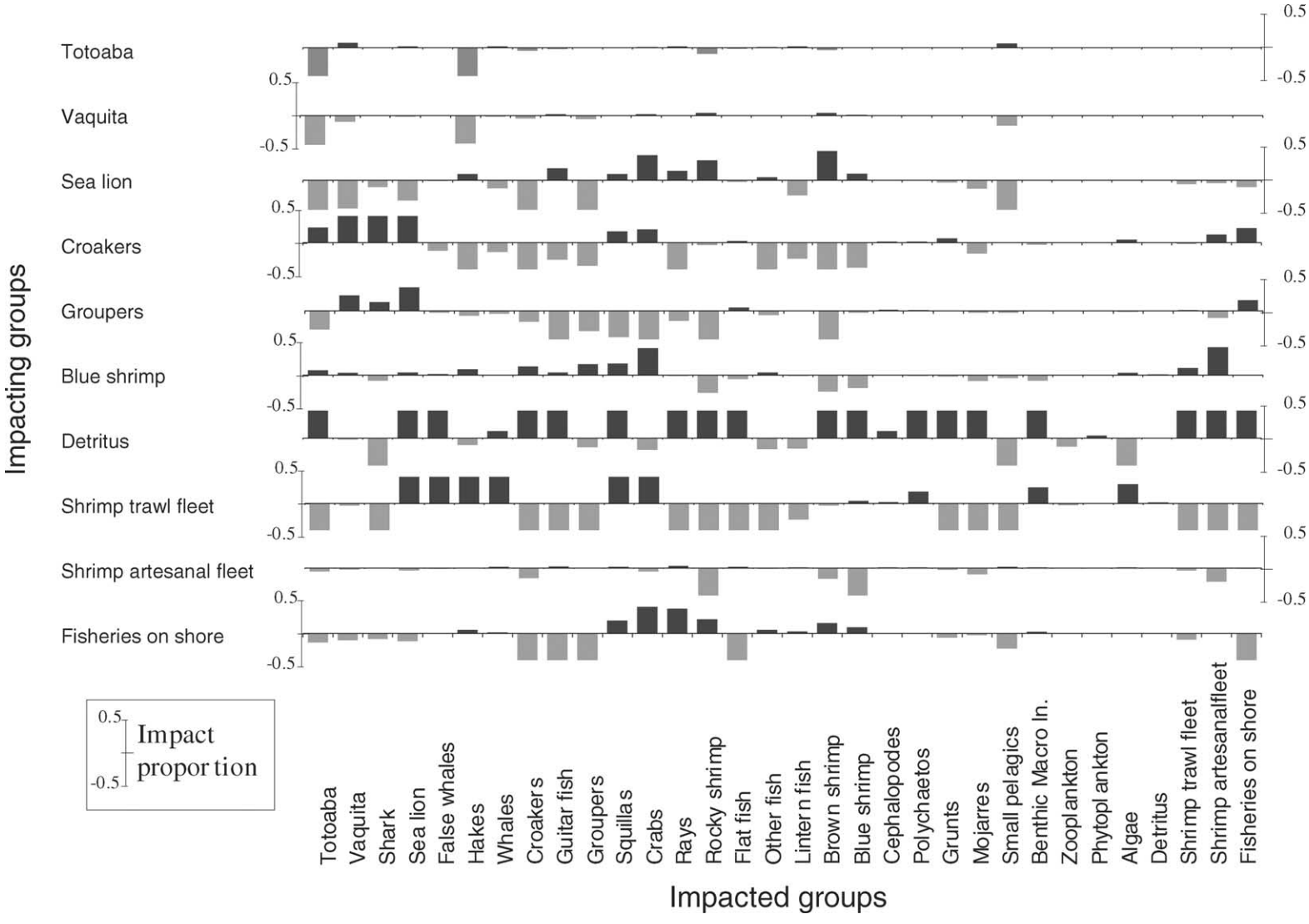

Fig. 4. Selected mixed trophic impact groups of the Northern Gulf of California model. Positive and negative effects on biomass of each group are represented above and below the line.

Table 7
Comparison of ecosystem statistics

Index	Veracruz[a,b]	Yucatán[a,c]	Campeche[a,d]	Central GC[e,f]	Northern GC[f]	Average	Maximum/ average (%)	Minimum/ aerage (%)
SC/TST	0.456	*0.327*	0.622	0.707	**1.068**	0.636	167.89	51.39
SR/TST	0.266	*0.187*	0.376	0.391	**0.414**	0.327	126.65	57.37
SFD/TST	0.278	*0.123*	**1.439**	0.216	0.331	0.477	301.52	25.73
SAP/TST	*0.186*	0.215	**1.574**	0.715	1.104	0.759	207.44	24.53
TPP/TR	0.389	0.754	**3.863**	1.383	1.605	1.599	241.62	24.33
TPP/TB	*5.470*	6.972	**41.403**	25.227	17.387	19.292	214.61	28.35
TB/TST	0.019	**0.032**	*0.010*	0.015	0.019	0.019	168.42	52.63
CI	*0.244*	0.278	0.281	0.245	**0.318**	0.273	116.40	89.31
SO	*0.155*	0.195	0.171	0.327	**0.544**	0.278	195.40	55.68
CMTL	3.440	**4.110**	*2.820*	2.990	2.930	3.258	126.15	86.56

Bold numbers are maximum values, and italic numbers are minimum values.
SC: sum of consumption; TST: total system throughput; SR: sum of respiration; SFD: sum of flows to detritus; SAP: sum of production; TR: total respiration; TPP: total primary production; TB: total biomass; CI: connectance index; SO: system omnivory; CMTL: catch mean trophic level.
[a] Gulf of México.
[b] Arreguín-Sánchez et al. (1993a).
[c] Arreguín-Sánchez et al. (1993b).
[d] Manikchand-Haileman et al. (1998b) and Arreguín-Sánchez et al. (2002).
[e] Arreguín-Sánchez et al. (2003b).
[f] Gulf of California.

used for management purposes in the same way as biological reference point (BRP), for exploited fish stocks (Hilborn and Walters, 1992). Even when no ERPs have been defined, some ecosystem attributes can be used to prevent negative influences of exploitation on ecosystem health. Pauly et al. (1998) explained that "fishing down the food web" is a symptom of ecosystem deterioration when high trophic levels are being overexploited. In a similar way, Arreguín-Sánchez et al. (2003a) describe "fishing up the food web" when a low trophic level is overexploited. In both cases, ecosystem structure and function change. Arreguín-Sánchez et al. (2003b) suggest that the balance of production and losses through trophic levels can be used to measure how the ecosystem is being exploited. However, the lower limits of production that are needed to maintain or recover an ecosystem remain unknown. One approach to measure this balance is through biomass and trophic catch pyramid analysis. A pyramid apex angle is an index of ecosystem structure (Pauly and Christensen, 1993). If the angles for biomass and catch pyramids are not significantly different, one interpretation is that use of the ecosystem is balanced. In the case of the upper Gulf of California, the difference between biomass decrease rate (1.07) and catch rate (0.97) with trophic level is less than 10%. Additionally, mixed trophic impact analysis shows that the most affected groups were impacted more by predation and competition than by fishing pressure (Fig. 4).

We suggest that the last point must being examined in future works to increase and improve the foundations that allow more precise evaluations of the health of the system, and for obtaining more specific tools to make better decisions about ecological regulation of the system.

Acknowledgements

F.A.S. thanks the Consejo Nacional de Ciencia y Tecnología (CONACYT) project 34865-B, Instituto Politécnico Nacional (IPN) CGPI project 20010287, COFAA, EDI, and INCO-DC project "Putting fisheries in the ecosystem context." JLM and SLC received support from CIBNOR project EP3.1. MVMZ holds CONACYT scholarship No. 144436. Thanks to the CIBNOR editing staff.

References

Allen, K.R., 1971. Relation between production and biomass. J. Fish. Res. Bd. Can. 28, 1573–1581.

Arreguín-Sánchez, F., Valero-Pacheco, E., Chávez, E.A., 1993a. A trophic box of the coastal fish communities of the southwestern Gulf of Mexico. In: Christensen, V., Pauly, D. (Eds.), Trophic Models of Aquatic Ecosystems. International Center for Living Aquatic Resources Management, Manila, The Philippines, pp. 197–205.

Arreguín-Sánchez, F., Seijo, J.C., Valero, E., 1993b. An application of the ECOPATH II to the North continental shelf ecosystem of Yucatan, Mexico. In: Christensen, V., Pauly, D. (Eds.), Trophic Models of Aquatic Ecosystems. International Center for Living Aquatic Resources Management, Manila, The Philippines, pp. 269–278.

Arreguín-Sánchez, F., Contreras, M., Moreno, V., Burgos, R., Valdés, D., 1996. Population dynamics and stock assessment of the red grouper (*Epinephelus morio*) fishery on the Campeche Bank. In: Arreguín-Sánchez, F., Munro, J.L., Balgos, M., Pauly, D. (Eds.), Biology, Fisheries and Culture of Tropical Groupers and Snappers, vol. 48. International Center for Living Aquatic Resources Management, Manila, The Philippines, pp. 449–467.

Arreguín-Sánchez, F., 2002. Impact of harvesting strategies on fisheries and community structure on the Continental Shelf of the Campeche Sound, Southern Gulf of Mexico. In: Proceedings of the Use of Ecosystem Models to Investigate Multispecies Management. Strategies for Capture Fisheries Centre Research Reports, Vancouver, Canada, Vol. 10 (2), pp. 127–134.

Arreguín-Sánchez, F., Zetina-Rejón, M.J., Manickchand-Heileman, S., Ramírez-Rodríguez, M., Vidal, L., 2003a. Simulated response to harvesting strategies of an exploited ecosystem on the southwestern Gulf of Mexico. Ecol. Model. (in press).

Arreguín-Sánchez, F., Arcos, F., Chávez, E.A., 2003b. Flows of biomass and structure in an exploited benthic ecosystem in the Gulf of California, Mexico. Ecol. Model. (in press).

Arvizu, J., Chávez, H., 1972. Sinopsis sobre la biología de la totoaba, *Cynoscion macdonaldi* (Gilbert 1890). FAO Fish. Synops. 108, 26.

Balart, E.F., Castro-Aguirre, J.L., 1995. Estimación del impacto de la depredación de la merluza sobre la langostilla. In: Aurioles-Gamboa, D., Balart, E.F. (Eds.), La Langostilla: Ecología y Aprovechamiento. Centro de Investigaciones Biológicas del Noroeste, La Paz, BCS, México, pp. 139–162.

Bocanegra-Castillo, N., 1998. Interacciones tróficas de la ictiofauna más abundante en la laguna Ojo de Liebre, Baja California Sur, México. Masters thesis, Centro Interdisciplinario de Ciencias Marinas-IPN, La Paz, BCS, Mexico, 70 pp.

Boletzky, S.Y., Hanlon, R.T., 1983. A review of the laboratory maintenance, rearing and culture of cephalopod mollusks. In: Roper-Clyde, F.E., Lu, C.C., Hochberg, F.G. (Eds.), Memoirs of the National Museum of Victoria: Proceedings of the Workshop on the Biology and Resource Potential of Cephalopods, Melbourne, Australia, vol. 44, pp. 147–187.

Branstetter, S., 1987. Age, growth and reproductive biology of the silky shark, *Carcharhinus falciformis*, and the scalloped hammerhead, *Sphyrna lewini*, from the Northwestern Gulf of Mexico. Environ. Biol. Fish. 19 (3), 161–173.

CephBase, 2001. Supported by: CephBase team. Census of marine life online. http://cephbase.nrcc.utmb.edu/.

Cetacea, 2001. Supported by: Whale and Dolphin Conservation Society, Environmental Investigation Agency, Cheshire, UK. http://www.cetacea.org/.

Chao, L.N., 1995. Sciaenidae. Corvinas, barbiches, bombaches, corvinatas, corvinetas, corvinillas, lambes, pescadillas, roncachos, verrugatos. In: Fischer, W., Krupp, F., Schneider, W., Sommer, C., Carpenter, K.E., Niem, V. (Eds.), Guía FAO para la Identificación de Especies para los Fines de la Pesca, vol. 3. FAO, Rome, pp. 1427–1518.

Christensen, V., 1994. Energy-based ascendancy. Ecol. Model. 72, 129–144.

Christensen, V., 1995. Ecosystem maturity—towards quantification. Ecol. Model. 77, 3–32.

Christensen, V., Pauly, D., 1992. Ecopath II, a system for balancing steady state ecosystem models and calculating network characteristics. Ecol. Model. 61, 169–185.

Christensen, V., Pauly, D. (Eds.), 1993. Trophic Models of Aquatic Ecosystems. International Center for Living Aquatic Resources Management. Manila, The Philippines, 390 pp.

Christensen, V., Walters, C.J., Pauly, D., 2000. Ecopath with Ecosim, Version 4, Help System. University of British Columbia, Fisheries Centre, Vancouver, Canada and International Center for Living Aquatic Resources Management. Penang, Malaysia.

Cohen, D.M., Inada, T., Iwamoto, T., Scialabba, N., 1990. FAO species catalogue. Gadiform fishes of the world (Order Gadiformes): an annotated and illustrated catalogue of cods, hakes, grenadiers and other gadiform fishes known to date. FAO Fish. Synop. 125 (10), 442.

Collard, S.N., 1970. Forage of some Eastern Pacific midwater fishes. Copeia 2, 348–354.

Compagno, L.J.V., 1984. FAO species catalogue. Sharks of the world. An annotated and illustrated catalogue of shark species known to date. Part 2: carcharhiniformes. FAO Fish. Synop. 125 (4), 655.

Crustacean, 2001. Supported by: Crustacean Society and Virginia Institute of Marine Science Online. http://www.vims.edu/tcs/.

Cruz-Escalona, V.H., 1998. Análisis trófico de la ictiofauna de la laguna de San Ignacio. BCS masters thesis, Centro Interdisciplinario de Ciencias Marinas-IPN, La Paz, BCS, Mexico, 128 pp.

Dall, W., Hill, B.J., Rothlisberg, P.C., Staples, D.J., 1990. The biology of the peneidae. In: Blaxter, J.H.S., Southward, A.J. (Eds.), Marine Biology, vol. 27. Academic Press, London, 489 pp.

Dou, S.Z., 1992. Feeding habit and seasonal variation of food constituents of left-eyed flounder, *Paralichthys olivaceus*, of the Bohai Sea. Mar. Sci. 4 (4), 277–281.

Eschmeyer, W.N., Herald, E.S., Hammann, H., 1983. A Field Guide to Pacific Coast Fishes of North America. Houghton Mifflin Company, Boston, 336 pp.

FAO, 1995. Catálogo para las Especies Susceptibles a la Pesca de la Región Pacifico Centro-Oriental: Invertebrados, vol. I. FAO, Rome, 365 pp.

Felix-Pico, E., 1973. Agrupaciones de fauna (Macro invertebrados). Sección IV. Biología. Universidad Autónoma de Baja California. Unidad de Ciencias Marinas. Final report to Secretaría de Recursos Hidráulicos. Second Stage of Chemical

Study of Insecticide Pollution on the Colorado Outlet, vol. 2. Ensenada, BC, Mexico, 394 pp.

Fitch, J.E., Lavenberg, R.J., 1975. Tidepool and nearshore fishes of California. In: California Natural History Guides, vol. 38. University of California Press, Berkeley and Los Angeles, 156 pp.

Froese, R., Pauly, D. (Eds.), 2001. FishBase. World Wide Web Electronic Publication. www.fishbase.org.

Froese, R., Pauly, D. (Eds.), 2003. FishBase. World Wide Web Electronic Publication. www.fishbase.org, version 2003.

Galván-Magaña, F., Nienhuis, H.J., 1989. Seasonal abundance and feeding habits of sharks of the lower Gulf of California, Mexico. Calif. Fish. Game 75 (2), 74–84.

García-Rodríguez, F.J., 1999. Cambios espaciales y estacionales en la estructura trófica y consumo del lobo marino de California, *Zalophus californianus*, en la región de las grandes islas, Golfo de California. Masters thesis, Centro Interdisciplinario de Ciencias Marinas-IPN, La Paz, BCS, Mexico, 73 pp.

Gómez-Pompa, A., Dirzo, R., 1995. Reservas de la biosfera y otras áreas naturales protegidas de México. Instituto Nacional de Ecología (INE) and Comisión Nacional para el Conocimiento y Uso de la Biodiversidad, Mexico.

Hensley, D.A., 1995. Paralichthyidae. Lenguados. In: Fischer, W., Krupp, F., Schneider, W., Sommer, C., Carpenter, K.E., Niem, V. (Eds.), Guía FAO Para la Identification de Especies Para los Fines de la Pesca, vol. 3. FAO, Rome, pp. 1349–1380.

Hernández-Moreno, L.G., 2000. Aspectos sobre la ecología y biología de las jaibas *Callinectes arcuatus* y *C. bellicosus* (Crustacea: Portunidae) en la laguna costera Las Guásimas, Sonora, México. Masters thesis, Centro de Investigaciones Biológicas del Noroeste, La Paz, BCS, Mexico, 56 pp.

Hilborn, R., Walters, C.J., 1992. Quantitative Fisheries Stock Assessment. Choice, Dynamics and Uncertainty. Chapman & Hall, Routledge, 569 pp.

IMMA, 2001. International Marine Mammal Association. Online Supported by: Resources for Marine Mammal Conservation. http://www.imma.org/index.html.

INEGI, 2000. Dirección general de Estadística. Encuesta Nacional de Población y Vivienda 2000. Instituto Nacional de Estadística, Geografía e Informática, Mexico.

Jarre, A., Palomares, M.L., Soriano, M.L., Sambilay Jr., V.C., Pauly, D., 1990. MAXIMS: a computer program for estimating the food consumption of fishes from diet stomach contents. In: Data and Population Parameters. Ecosystems. International Center for Living Aquatic Resources Management, Manila, The Philippines, 27 pp.

Jarre-Teichmann, A., 1992. Steady-state modeling of the Peruvian upwelling ecosystem. Doctoral thesis, University of Bremen, Bremerhaven, Germany, 153 pp.

Littler, M.M., Littler, D.S., 1981. Intertidal macrophyte communities from Pacific Baja California and the Upper Gulf of California: relatively constant vs. environmentally fluctuating systems. Mar. Ecol. Prog. 4, 145–158.

Lluch-Belda, D., 1970. Crecimiento y mortalidad del lobo marino de California. Anuales de la Escuela Nacional de Ciencias Biológicas, vol. 18.

Lluch-Cota, S., Arias-Arechiga, J.P., 2000. Sobre la importancia de considerar, Centros de Actividad Biológica para la regionalización del océano: El caso del Golfo de California. In: Lluch-Belda, D., Elorduy-Garay, J., Lluch-Cota, S.E., Ponce-Diaz, G. (Eds.), Centros de Actividad Biológica del Pacífico Mexicano. Centro de Investigaciones Biológicas del Noroeste, Centro Interdisciplinario de Ciencias Marinas-IPN, Consejo Nacional de Ciencia y Tecnología, Mexico, 367 pp.

López-Martínez, J., 2000. Dinámica de la pesquería de camarón (*Penaeus californiensis*) en el litoral sonorense, y su relación con algunos parámetros océano–atmosféricos. Doctoral thesis, Centro Interdisciplinario de Ciencias Marinas-IPN, La Paz, BCS, Mexico, 174 pp.

López-Martínez, J., Salinas-Zavala, C.A., Muhlia-Melo, A., Morales-Azpeitia, R., Alcántara-Razo, E., 1997. Evaluación del potencial pesquero del camarón de roca, cacahuate o japonés *Sicyonia* spp en el litoral sonorense. Final report. Secretaría del Medio Ambiente Recursos Naturales y Pesca. Centro de Investigaciones Biológicas del Noroeste. Guaymas, Sonora, Mexico, 48 pp.

Manikchand-Haileman, S., Soto, L.A., Escobar, E., 1998a. A preliminary trophic model of the continental shelf, southwestern Gulf of Mexico. Estuar. Coast. Shelf. Sci. 46, 885–899.

Manikchand-Haileman, S., Arreguín-Sánchez, F., Lara-Domínguez, A.L., Soto, L.A., 1998b. Energy flow and network analysis of Terminos Lagoon, SW, Gulf of Mexico. J. Fish. Biol. 53, 179–197.

McEachran, J.D., 1995a. Rhinobatidae. Peces guitarra. In: Fischer, W., Krupp, F., Schneider, W., Sommer, C., Carpenter, K.E., Niem, V. (Eds.), Guía FAO para Identificación de Especies para los Fines de la Pesca, vol. 3. Pacifico Centro-Oriental. FAO, Rome, pp. 778–781.

McEachran, J.D., 1995b. Urolophidae. Rayas redondas. In: Fischer, W., Krupp, F., Schneider, W., Sommer, C., Carpenter, K.E., Niem, V. (Eds.), Guía FAO para Identificación de Especies para los Fines de la Pesca, vol. 3. Pacifico Centro-Oriental. FAO, Rome, pp. 786–792.

Molina, R.E., Manrique, F.A., 1997. Stomach contents of two planktivorous fishes of the Gulf of California during summer 1991. Ciencias Mar. 23 (2), 163–174.

Moser, H.G., Ahlstrom, E.H., 1996. Myctophidae: lanternfishes. In: Moser, H.G. (Ed.), The Early Stages of Fishes in the California Current Region. CalCOFI Atlas No. 33, 1505 pp.

Nelson, E., Ramírez, E.M., Arenas, F., Carranza, B., Jacquemine, P., Prado, S., Solís, N., 1980. Evaluación de los recursos demersales accesibles a redes de arrastre de fondo en el Golfo de California (Mar de Cortés), México, durante 1979. Programa de Investigación y Desarrollo Pesquero Integrado. Programa de las Naciones Unidas para el Desarrollo. FAO, Mexico, 124 pp.

Odum, E.P., 1969. The strategy of ecosystem development. Science 164, 262–270.

Odum, W.E., Heald, E.J., 1975. The detritus-based food web of an estuarine mangrove community. In: Cronin, L.E. (Ed.), Estuarine Research, vol. 1. Academic Press, New York, pp. 265–286.

Olivieri, R.A., Cohen, A., Chávez, F.P., 1993. An ecosystem model of Monterey Bay, California. In: Christensen, V., Pauly, D. (Eds.), Trophic Models of Aquatic Ecosystems. International Center for Living Aquatic Resources Management, Manila, The Philippines, pp. 315–337.

Pauly, D., 1978. A Preliminary Compilation of Fish Length Growth Parameters, vol. 55. Ber. Inst. Meereskd. Christian-Albrechts University, Kiel, Germany, pp. 1–200.

Pauly, D., 1980. On the interrelationship between natural mortality, growth parameters and mean environmental temperature in 175 fish stocks. J. Conseil Inter. L'Exploration Mer 39, 175–192.

Pauly, D., 1984a. Fish population dynamics in tropical waters: a manual for use with programmable calculators. ICLARM Stud. Rev. 8, 325.

Pauly, D., 1984b. Methods for assessing the marine stocks of Burma, with emphasis on the demersal species. BUR/77/003. FAO Field Document No. 6, Rome, 22 pp.

Pauly, D., Christensen, V., 1993. Stratified models of large marine ecosystems: a general approach and an application to the South China Sea. In: Sherman, K., Alexander, L.M., Gold, B.D. (Eds.), Large Marine Ecosystems: Stress, Mitigation and Sustainability. AAS Press, Washington, DC, 376 pp.

Pauly, D., Christensen, V. (Eds.), 1996. Mass-balance models of northeastern Pacific ecosystems. In: Proceedings of a Workshop Held at the Fisheries Centre, University of British Columbia, Vancouver, Canada.

Pauly, D., Christensen, V., Dalsgaard, J., Froese, R., Torres Jr., F., 1998. Fishing down food webs. Science 279, 860–863.

Pérez-España, H., Arreguín-Sánchez, F., 2001. An inverse relationship between stability and maturity in models of aquatic ecosystems. Ecol. Model. 145, 189–196.

Pérez-Mellado, J., 1980. Análisis de la fauna de acompañamiento del camarón capturado en las costas de Sonora y Sinaloa, México. Masters thesis, Instituto Tecnológico de Estudios Superiores de Monterrey, Sonora, México, 76 pp.

Polovina, J.J., 1984. Model of a coral reef ecosystem. The ECOPATH model and its application to French Frigate Shoals. Coral Reefs. 3 (1), 1–11.

Polovina, J.J., Ow, M.D., 1983. Ecopath User's Manual and Program Listings. NMFS/NOAA Honolulu, HI, 46 pp.

Randall, S.W., Wursing, B.G., Norris, K.S., 1980. Un reconocimiento de los mamíferos marinos en el Alto Golfo de California, México. In: Sexta reunión internacional para el estudio de los mamíferos marinos. Sociedad Mexicana para el estudio de Los mamíferos (Ed.), La Paz, BCS, Mexico, pp. 1–41.

Silber, G.K., 1990. Distributional relations of cetaceans in the northern Gulf of California, with special reference to the vaquita, *Phocoena sinus*. Doctoral thesis, University of California, Santa Cruz, 113 pp.

Theronx, R., Wigley, R., 1998. Quantitative Composition and Distribution of the Macrobenthic Invertebrate Fauna of the Continental Shelf Ecosystems of the Northeastern Unites States. USA, 68 pp.

Ulanowicz, R.E., 1986. Growth and Development: Ecosystem Phenomenology. Springer-Verlag, New York, 203 pp.

Ulanowicz, R.E., Norden, J., 1990. Symmetrical overhead in flow networks. Int. J. Syst. Sci. 21 (2), 429–437.

Vega-Cendejas, E., 1998. Trama trófica de la comunidad nectónica asociada al ecosistema del manglar en el litoral norte de Yucatán. Doctoral thesis, Facultad de Ciencias, Universidad Nacional Autónoma de México, Mexico, 170 pp.

Vega-Cendejas, M.E., Arreguín-Sánchez, F., 2001. Energy fluxes in a mangrove ecosystem from a coastal lagoon in Yucatan Peninsula, Mexico. Ecol. Model. 137, 119–133.

Whitehead, P.J.P., 1985. FAO species catalogue. Clupeoid fishes of the world. An annotated and illustrated catalogue of the herrings, sardines, pilchards, sprats, shads, anchovies and wolf-herrings. Part 1: chirocentridae, clupeidae and pristigasteridae. FAO Fish. Synop. 125 (7), 303.

World WildLife México, 2003. Saving from extinction the endangered endemic vaquita, Phoecena sinus, in the gulf of California México, Risk factors [on line]. http://www.wwf.org.mx/saving_vaquita2.php (consulted: April, 2003).

Yañez-Arancibia, A., Lara-Dominguez, A.L., Sánchez-Gil, P., Alvarez-Guillen, H., 1988. Ecological Evaluation of Fish Communities in Terminos Lagoon and Campeche Sound. Editorial Universitaria, Mexico, pp. 323–356.

Zeitschel, B., 1969. Primary productivity in the Gulf of California. Mar. Biol. 3, 201–207.

Zetina-Rejón, M.J., 1999. Influencia de la pesca de camarón en la estructura del ecosistema lagunar Huizache-Caimanero, Sinaloa, México. Masters thesis, Centro Interdisciplinario de Ciencias Marinas-IPN, La Paz, BCS, México, 93 pp.